Condensate Pump/Trap Combination Package
(Steam Pressure-Powered)

The Model **CPT-2**, Condensate Pump/Trap Combination Package, is a manufactured, ready-to-install system designed for installation on single heat transfer sources. The Condensate Pump/Trap Combination Package allows the heat transfer source to operate in a vacuum condition, increasing the heat transfer efficiency. The result is substantial savings in energy costs at attractive pay-back periods. Designed for efficient pumping of condensate, **CPT-2** is not vented to atmosphere, therefore there is no additional piping needed for a large vent. The **CPT-2** utilizes steam power in lieu of electric motors, eliminating the need for wiring motors, starters, and controls. The steam-powered pump package is capable of operation in flammable environments. Operating by steam pressure versus electric power, reduces pumping costs. The pump employs a float operated snap-acting mechanism with no external seals or packing, which eliminates seal maintenance, which is required in conventional pumps. All internal pump components and mechanism are constructed of Stainless Steel

MODEL CPT-2 SAVINGS

System Steam Pressure (psig)	Energy Savings (MM Btu/yr.)	Potential Savings ($ /yr.)
125	13,385.53	**66,927.67**
100	11,378.68	**56,893.41**
80	9,857.29	**49,286.44**
60	8,025.78	**40,128.90**
40	6,139.36	**30,696.78**
30	5,094.94	**25,474.72**
20	3,633.19	**18,165.97**
15	2,802.91	**14,014.56**
10	1,913.97	**9,569.83**
5	595.62	**2,978.09**

NOTES:

1. Savings are based on max. potential savings at max. pump capacity on 8400 hr./yr. of continuous operation
2. Steam costs at $5.00/MM Btu
3. Savings based on approx. calculations.

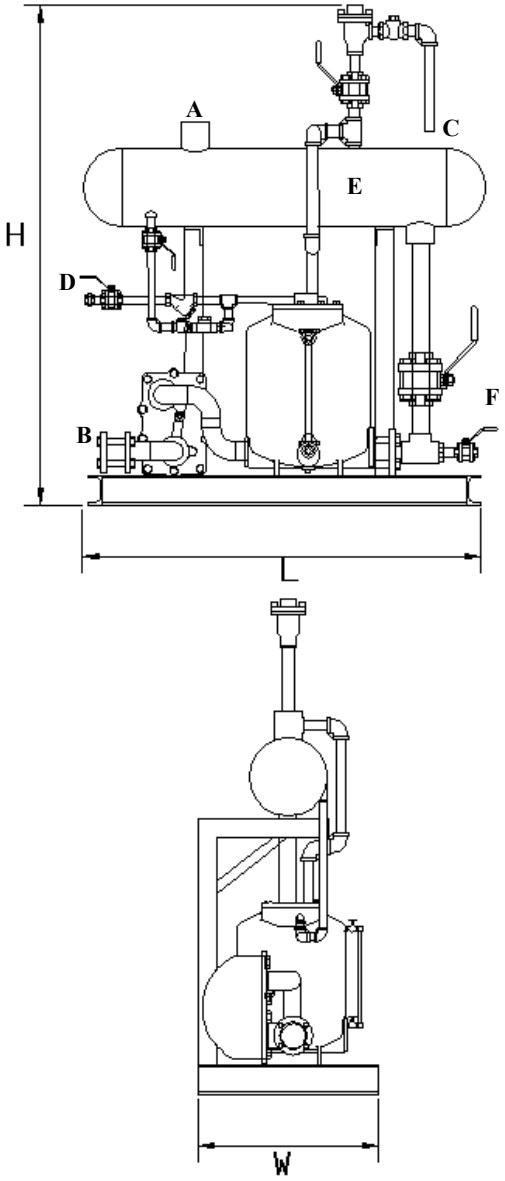

Legend:

Approximate Dimensions: 72”H x 66”L x 26”W

A. Condensate Inlet 2” NPT
B. Condensate Discharge 2” NPT
C. Air Outlet
D. Steam Inlet ½” NPT
E. Receiver Tank 8”x36”
F. Drain ½” NPT

EnviroSep* • *Fluid & Heat Recovery Systems
A Division of TMT, Inc.
PO Box 857 • Georgetown, SC 29442
Phone (843) 546-7400 / Fax (843) 546-7407
www.envirosep.com

COPYRIGHT ©1999 By EnviroSep

CONDITIONS OF OPERATION

Max. Allowable Pressure / Temperature:	125 psig / 450 °F
Discharge rate per cycle:	7.1 gal.
Max. instantaneous discharge rate:	90 gpm
Min. Motive Pressure:	5 psig
Steam Consumption:	3 lbs. per 1000 lbs. of liquid pumped
Compressed Air Consumption:	100 SCF per 1000 lbs. of liquid pumped

MODEL CPT-2 CAPACITIES

Steam Pressure (psig)	Discharge Head (psig)	Flow Rate (lbs. / hr.)
125	15	11,100
125	40	9,200
125	60	7,800
125	80	6,000
125	100	4,700
125	115	3,800
100	15	10,500
100	40	8,200
100	60	6,100
100	80	5,000
75	15	10,300
75	40	7,200
75	60	4,300
50	10	9,700
50	25	7,400
50	40	4,100
25	5	9,600
25	10	7,800
25	15	6,000
10	2	8,100
10	5	5,300
5	2	4,300

STANDARD CONSTRUCTION

- Fabricated Angle Iron Frame
- Fabricated Steel Tank
- Bronze Ball Valves
- Thermodynamic Steam Trap
- Cast Iron Pump with Gauge Glass, and Stainless Steel internal components and Check Valves
- Hydrostatically Tested
- High Temperature Industrial Enamel Paint

PACKAGE OPTIONS

- Additional / Oversized Condensate Inlet connection(s)
- Oversized Condensate Receiver
- Carbon Steel 3-piece Ball Valves
- Forged Steel Gate Valves
- Low-profile design for height restricted applications
- All Welded piping
- Fabricated Square Tubing Frame
- Flash Steam Heat Recovery System only without Condensate Inlet for Flash Recovery from existing Atmospheric Tanks.

Regardless of system size, temperature, pressure, fluid medium, or available floor space, **EnviroSep** can service all specialized needs.

EnviroSep • *Fluid & Heat Recovery Systems*
A Division of TMT, Inc.
PO Box 857 • Georgetown, SC 29442
Phone (843) 546-7400 / Fax (843) 546-7407
www.envirosep.com

COPYRIGHT ©1999 By EnviroSep